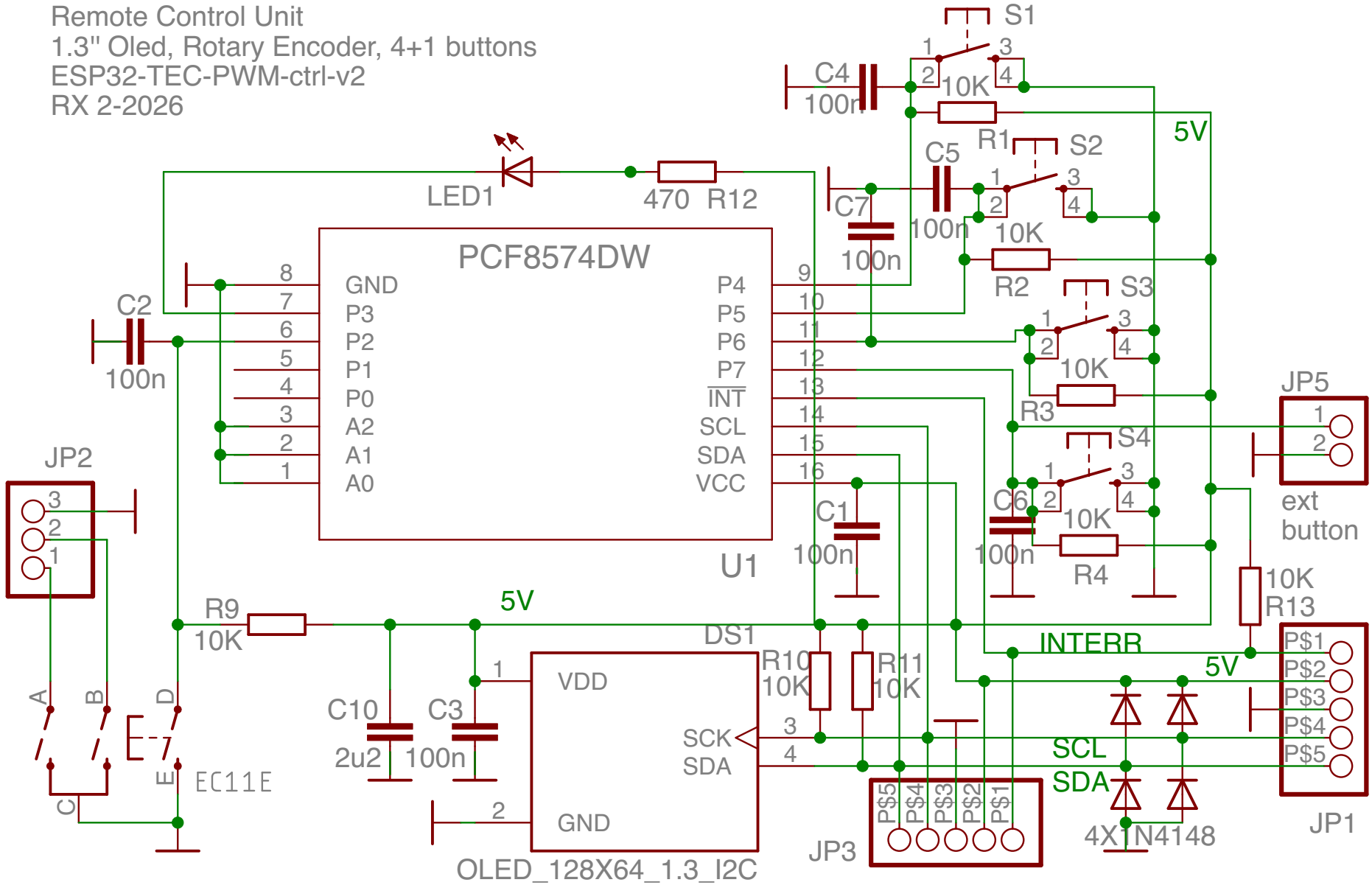Remote Control Unit
1.3" Oled, Rotary Encoder, 4+1 buttons
ESP32-TEC-PWM-ctrl-v2
RX 2-2026